Microresistor Beam

Introduction

This example illustrates the ability to couple thermal, electrical, and structural analysis in one model. This particular application moves a beam by passing a current through it; the current generates heat, and the temperature increase leads to displacement through thermal expansion. The model estimates how much current and increase in temperature are necessary to displace the beam.

Although the model involves a rather simple 3D geometry and straightforward physics, it provides a good example of multiphysics modeling.

Model Definition

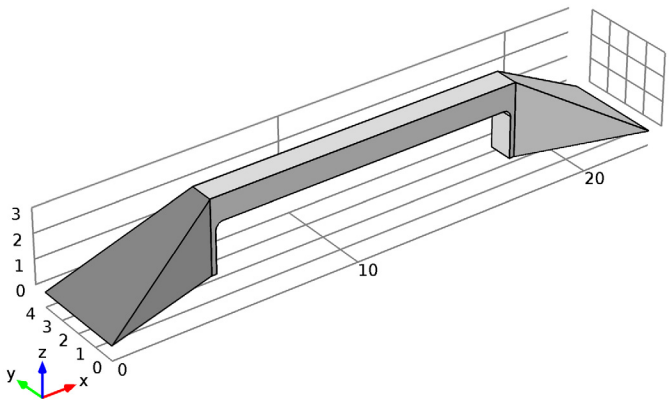

Figure 1: Microbeam geometry.

A copper microbeam has a length of 13 μm with a height and width of 1 μm. Feet at both ends bond it rigidly to a substrate. An electric potential of 0.2 V applied between the feet induces an electric current. Due to the material's resistivity, the current heats up the structure. Because the beam operates in the open, the generated heat dissipates into the air. The thermally induced stress loads the material and deforms the beam.

As a first approximation, you can assume that the electrical conductivity is constant. However, a conductor's resistivity increases with temperature. In the case of copper, the relationship between resistivity and temperature is approximately linear over a wide range of temperatures:

$$\rho = \rho_0(1 + \alpha(T - T_0)) \tag{1}$$

α is the temperature coefficient. You obtain the conductor's temperature dependency from the relationship that defines electric resistivity; conductivity is simply its reciprocal ($\sigma = 1/\rho$).

For the heat transfer equations, set the base boundaries facing the substrate to a constant temperature of 323 K. You model the convective air cooling in other boundaries using a heat flux boundary condition with a heat transfer coefficient, h, of 5 W/(m^2·K) and an external temperature, T_{inf}, of 298 K. Standard constraints handle the bases' rigid connection to the substrate.

Results and Discussion

Figure 2 shows the temperature field on the microbeam surface when solving the model using a temperature-dependent resistivity as in Equation 1. Based on the color scale, the maximum temperature is about 710 K.

Figure 3 shows the microbeam's deformation. The displacement for the temperature-dependent case is 49 nm compared to the maximum displacement for constant electrical conductivity, which is 89 nm (the plot scales the deformation by a factor of around 20).

 ©2012 COMSOL

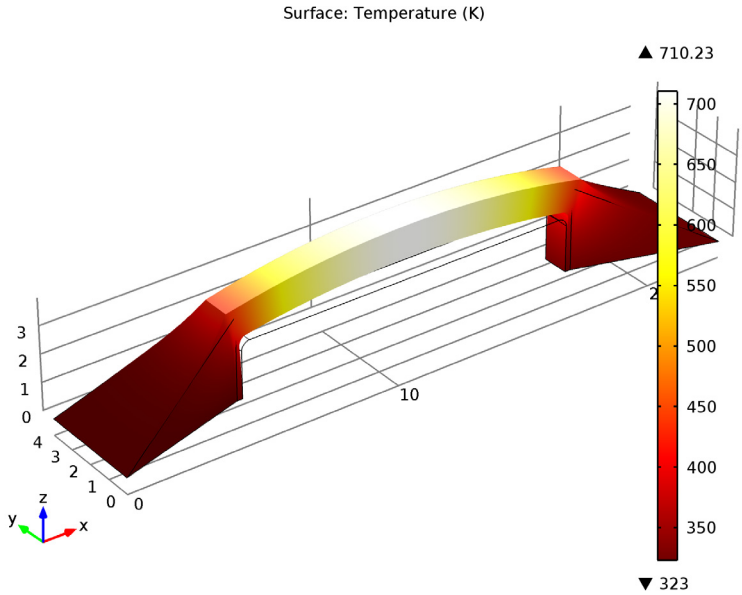

Figure 2: Surface temperature with temperature-dependent electrical conductivity.

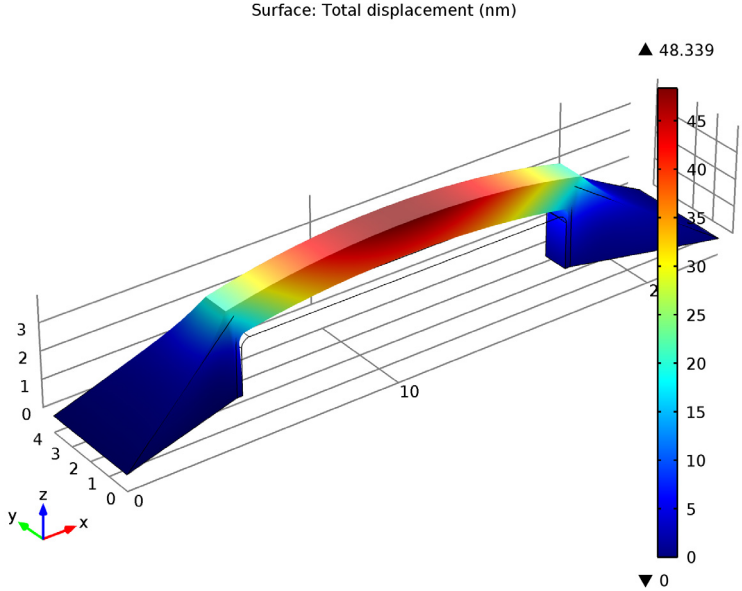

Figure 3: Microbeam deformation with temperature-dependent electrical conductivity.

Notes About the COMSOL Implementation

In this example you create the 3D geometry by starting with two 2D work planes. The first one views the geometry from above, and the second does so from the side. You create cross sections on the work planes, which you then extrude into 3D. As the final step you create the resistor beam geometry as the intersection of the extruded objects. You can also skip the step-by-step instructions for the geometry creation and import the ready-made geometry directly from the Model Library.

By using the *Joule Heating and Thermal Expansion* multiphysics interface you automatically add the equations for three physics including the necessary couplings. In this case the physics equations describe the current and heat conduction and structural mechanics problems. The interface also provides suitable defaults for the solver.

Model Library path: `MEMS_Module/Actuators/microresistor_beam`

Modeling Instructions

MODEL WIZARD

1. Go to the **Model Wizard** window.
2. Click **Next**.
3. In the **Add physics** tree, select **Structural Mechanics>Joule Heating and Thermal Expansion (tem)**.
4. Click **Add Selected**.
5. Click **Next**.
6. Find the **Studies** subsection. In the tree, select **Preset Studies>Stationary**.
7. Click **Finish**.

GLOBAL DEFINITIONS

Parameters

1. In the **Model Builder** window, right-click **Global Definitions** and choose **Parameters**.
2. In the **Parameters** settings window, locate the **Parameters** section.

 ©2012 COMSOL

3 In the table, enter the following settings:

NAME	EXPRESSION	DESCRIPTION
V0	0.2[V]	Applied voltage
T0	323[K]	(As is)
Text	298[K]	External temperature
k	5[W/(m^2*K)]	Heat transfer coefficient

GEOMETRY 1

1 In the **Model Builder** window, under **Model 1** click **Geometry 1**.

2 In the **Geometry** settings window, locate the **Units** section.

3 From the **Length unit** list, choose **¬µm**.

4 Right-click **Model 1>Geometry 1** and choose **Work Plane**.

Bézier Polygon 1

1 In the **Model Builder** window, under **Model 1>Geometry 1>Work Plane 1** right-click **Plane Geometry** and choose **Bézier Polygon**.

2 In the **Bézier Polygon** settings window, locate the **Polygon Segments** section.

3 Find the **Added segments** subsection. Click the **Add Linear** button.

4 Find the **Control points** subsection. In row **2**, set **xw** to 5.

5 In row **2**, set **yw** to 1.5.

6 Find the **Added segments** subsection. Click the **Add Linear** button.

7 Find the **Control points** subsection. In row **2**, set **xw** to 18.

8 Find the **Added segments** subsection. Click the **Add Linear** button.

9 Find the **Control points** subsection. In row **2**, set **xw** to 23.

10 In row **2**, set **yw** to 0.

11 Find the **Added segments** subsection. Click the **Add Linear** button.

12 Find the **Control points** subsection. In row **2**, set **yw** to 4.

13 Find the **Added segments** subsection. Click the **Add Linear** button.

14 Find the **Control points** subsection. In row **2**, set **xw** to 18.

15 In row **2**, set **yw** to 2.5.

16 Find the **Added segments** subsection. Click the **Add Linear** button.

17 Find the **Control points** subsection. In row **2**, set **xw** to 5.

18 Find the **Added segments** subsection. Click the **Add Linear** button.

19 Find the **Control points** subsection. In row **2**, set **xw** to 0.

20 In row **2**, set **yw** to 4.

21 Find the **Added segments** subsection. Click the **Add Linear** button.

22 Find the **Control points** subsection. Click the **Close Curve** button.

23 Click the **Build All** button.

24 Click the **Zoom Extents** button on the Graphics toolbar.

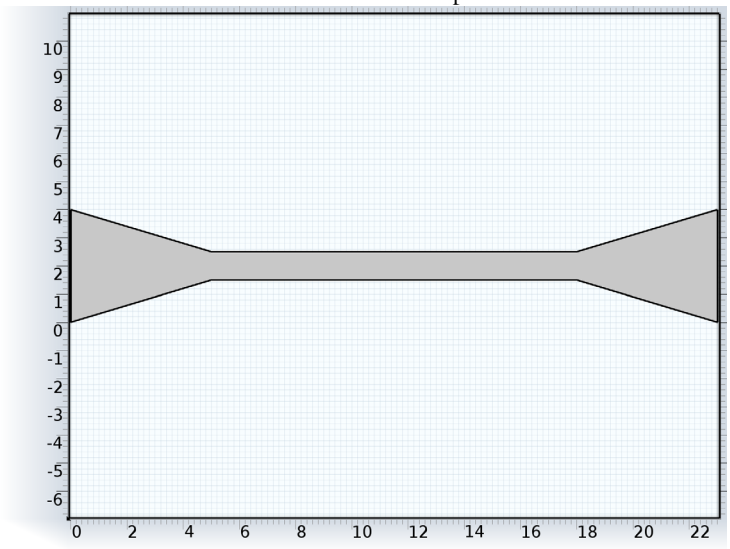

Extrude 1

1 In the **Model Builder** window, under **Model 1>Geometry 1** right-click **Work Plane 1** and choose **Extrude**.

2 In the **Extrude** settings window, locate the **Distances from Plane** section.

3 In the table, enter the following settings:

DISTANCES (¬ M)
3

4 Click the **Build All** button.

 ©2012 COMSOL

5 Click the **Zoom Extents** button on the Graphics toolbar.

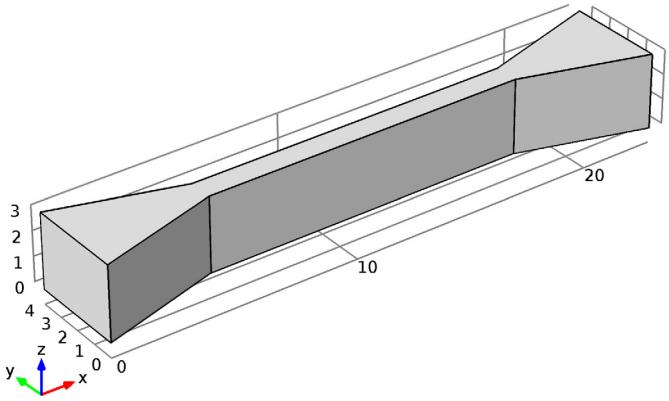

Work Plane 2

1 In the **Model Builder** window, right-click **Geometry 1** and choose **Work Plane**.

2 In the **Work Plane** settings window, locate the **Work Plane** section.

3 From the **Plane type** list, choose **Face parallel**.

4 On the object **ext1**, select Boundary 6 only.

5 In the **Offset in local z direction** edit field, type `-1.5`.

6 Select the **Reverse direction of local axis** check box.

7 From the **3D projection** list, choose **Entire 3D geometry**.

Bézier Polygon 1

1 In the **Model Builder** window, under **Model 1>Geometry 1>Work Plane 2** right-click **Plane Geometry** and choose **Bézier Polygon**.

2 In the **Bézier Polygon** settings window, locate the **Polygon Segments** section.

3 Find the **Added segments** subsection. Click the **Add Linear** button.

4 Find the **Control points** subsection. In row **1**, set **xw** to `-11.5`.

5 In row **1**, set **yw** to `-1.5`.

6 In row **2**, set **xw** to `-6.3`.

7 In row **2**, set **yw** to `-1.5`.

8 Find the **Added segments** subsection. Click the **Add Linear** button.

9 Find the **Control points** subsection. In row **2**, set **yw** to `0.5`.

10 Find the **Added segments** subsection. Click the **Add Linear** button.

11 Find the **Control points** subsection. In row **2**, set **xw** to `6.3`.

12 Find the **Added segments** subsection. Click the **Add Linear** button.

13 Find the **Control points** subsection. In row **2**, set **yw** to `-1.5`.

14 Find the **Added segments** subsection. Click the **Add Linear** button.

15 Find the **Control points** subsection. In row **2**, set **xw** to `11.5`.

16 Find the **Added segments** subsection. Click the **Add Linear** button.

17 Find the **Control points** subsection. In row **2**, set **xw** to `6.5`.

18 In row **2**, set **yw** to `1.5`.

19 Find the **Added segments** subsection. Click the **Add Linear** button.

20 Find the **Control points** subsection. In row **2**, set **xw** to `-6.5`.

21 Find the **Added segments** subsection. Click the **Add Linear** button.

22 Find the **Control points** subsection. Click the **Close Curve** button.

23 Click the **Zoom Extents** button on the Graphics toolbar.

Fillet 1

1 In the **Model Builder** window, under **Model 1>Geometry 1>Work Plane 2** right-click **Plane Geometry** and choose **Fillet**.

2 On the object **b1**, select Points 4 and 6 only.

3 In the **Fillet** settings window, locate the **Radius** section.

4 In the **Radius** edit field, type `0.3`.

 ©2012 COMSOL

5 Click the **Build All** button.

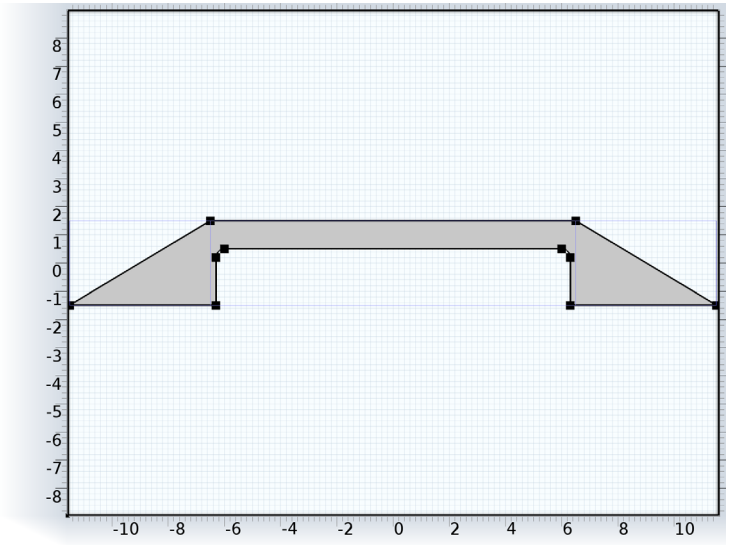

Extrude 2

1 In the **Model Builder** window, under **Model 1>Geometry 1** right-click **Work Plane 2** and choose **Extrude**.

2 In the **Extrude** settings window, locate the **Distances from Plane** section.

3 In the table, enter the following settings:

DISTANCES (¬ M)
4

4 Click the **Build All** button.

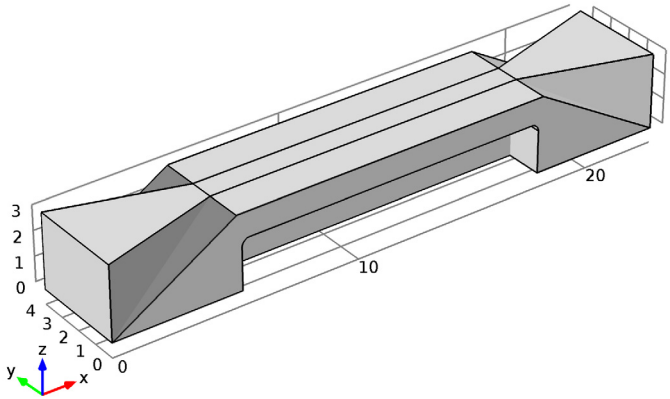

Intersection 1

1 In the **Model Builder** window, right-click **Geometry 1** and choose **Boolean Operations>Intersection**.

2 Select the objects **ext1** and **ext2** only.

3 Click the **Build All** button.

Form Union

1 In the **Model Builder** window, under **Model 1>Geometry 1** right-click **Form Union** and choose **Build Selected**.

The model geometry is now complete.

DEFINITIONS

Add a set of selections that you can use later when applying boundary conditions.

Explicit 1

1 In the **Model Builder** window, under **Model 1** right-click **Definitions** and choose **Selections>Explicit**.

2 Right-click **Explicit 1** and choose **Rename**.

3 Go to the **Rename Explicit** dialog box and type `connector1` in the **New name** edit field.

4 Click **OK**.

 ©2012 COMSOL

5 In the **Explicit** settings window, locate the **Input Entities** section.

6 From the **Geometric entity level** list, choose **Boundary**.

7 Select Boundary 1 only.

Explicit 2

1 In the **Model Builder** window, right-click **Definitions** and choose **Selections>Explicit**.

2 Right-click **Explicit 2** and choose **Rename**.

3 Go to the **Rename Explicit** dialog box and type `connector2` in the **New name** edit field.

4 Click **OK**.

5 In the **Explicit** settings window, locate the **Input Entities** section.

6 From the **Geometric entity level** list, choose **Boundary**.

7 Select Boundary 13 only.

Explicit 3

1 In the **Model Builder** window, right-click **Definitions** and choose **Selections>Explicit**.

2 Right-click **Explicit 3** and choose **Rename**.

3 Go to the **Rename Explicit** dialog box and type `connectors` in the **New name** edit field.

4 Click **OK**.

5 In the **Explicit** settings window, locate the **Input Entities** section.

6 From the **Geometric entity level** list, choose **Boundary**.

7 Select Boundaries 1 and 13 only.

MATERIALS

1 In the **Model Builder** window, under **Model 1** right-click **Materials** and choose **Open Material Browser**.

2 In the **Material Browser** window, locate the **Materials** section.

3 In the tree, select **MEMS>Metals>Cu**.

4 Right-click and choose **Add Material to Model** from the menu.

Cu

1 In the **Model Builder** window, under **Model 1>Materials** click **Cu**.

2 In the **Material** settings window, locate the **Material Contents** section.

3 In the table, enter the following settings:

PROPERTY	NAME	VALUE
Relative permittivity	epsilonr	1

4 Locate the **Material Properties** section. In the **Material properties** tree, select **Electromagnetic Models>Linearized Resistivity>Reference resistivity (rho0)**.

5 Click **Add to Material**.

6 Locate the **Material Contents** section. In the table, enter the following settings:

PROPERTY	NAME	VALUE
Reference resistivity	rho0	`1.72e-8[ohm*m]`
Resistivity temperature coefficient	alpha	`0.0039[1/K]`
Reference temperature	Tref	`293[K]`

JOULE HEATING AND THERMAL EXPANSION

Joule Heating Model 1

1 In the **Model Builder** window, expand the **Model 1>Joule Heating and Thermal Expansion** node, then click **Joule Heating Model 1**.

2 In the **Joule Heating Model** settings window, locate the **Conduction Current** section.

3 From the σ list, choose **Linearized resistivity**.

Before solving the two-way coupled model with a temperature-dependent resistivity, use a constant resistivity for later comparison:

4 From the α list, choose **User defined**. Keep the default zero value for α.

Thermal Linear Elastic Material 1

1 In the **Model Builder** window, under **Model 1>Joule Heating and Thermal Expansion** click **Thermal Linear Elastic Material 1**.

2 In the **Thermal Linear Elastic Material** settings window, locate the **Thermal Expansion** section.

3 In the T_{ref} edit field, type `Text`.

Initial Values 1

1 In the **Model Builder** window, under **Model 1>Joule Heating and Thermal Expansion** click **Initial Values 1**.

2 In the **Initial Values** settings window, locate the **Initial Values** section.

 ©2012 COMSOL

3 In the T edit field, type `T0`.

Ground 1

1 In the **Model Builder** window, right-click **Joule Heating and Thermal Expansion** and choose the boundary condition **Electric Currents>Ground**.

2 In the **Ground** settings window, locate the **Boundary Selection** section.

3 From the **Selection** list, choose **connector2**.

Electric Potential 1

1 In the **Model Builder** window, right-click **Joule Heating and Thermal Expansion** and choose the boundary condition **Electric Currents>Electric Potential**.

2 In the **Electric Potential** settings window, locate the **Boundary Selection** section.

3 From the **Selection** list, choose **connector1**.

4 Locate the **Electric Potential** section. In the V_0 edit field, type `V0`.

Heat Flux 1

1 In the **Model Builder** window, right-click **Joule Heating and Thermal Expansion** and choose the boundary condition **Heat Transfer>Heat Flux**.

2 In the **Heat Flux** settings window, locate the **Boundary Selection** section.

3 From the **Selection** list, choose **All boundaries**.

Select all boundaries for simplicity; next you will add a node that overrides this boundary condition for the connectors.

4 Locate the **Heat Flux** section. Click the **Inward heat flux** button.

5 In the h edit field, type `k`.

6 In the T_{ext} edit field, type `Text`.

Temperature 1

1 In the **Model Builder** window, right-click **Joule Heating and Thermal Expansion** and choose the boundary condition **Heat Transfer>Temperature**.

2 In the **Temperature** settings window, locate the **Boundary Selection** section.

3 From the **Selection** list, choose **connectors**.

4 Locate the **Temperature** section. In the T_0 edit field, type `T0`.

Fixed Constraint 1

1 In the **Model Builder** window, right-click **Joule Heating and Thermal Expansion** and choose the boundary condition **Solid Mechanics>Fixed Constraint**.

2 In the **Fixed Constraint** settings window, locate the **Boundary Selection** section.

3 From the **Selection** list, choose **connectors**.

MESH 1

In the **Model Builder** window, under **Model 1** right-click **Mesh 1** and choose **Free Tetrahedral**.

Size

1 In the **Model Builder** window, under **Model 1>Mesh 1** click **Size**.

2 In the **Size** settings window, locate the **Element Size** section.

3 From the **Predefined** list, choose **Finer**.

4 In the **Model Builder** window, right-click **Mesh 1** and choose **Build All**.

STUDY 1

You can use the default solver settings for this model.

1 In the **Model Builder** window, right-click **Study 1** and choose **Compute**.

RESULTS

Stress (tem)

The first default plot presents a surface plot of the von Mises stress. Modify it to show the displacement magnitude.

1 In the **Model Builder** window, under **Results** right-click **Stress (tem)** and choose **Properties**.

2 In the **3D Plot Group** settings window, locate the **Node Properties** section.

3 In the **Name** edit field, type `Displacement (tem)`.

Displacement (tem)

1 In the **Model Builder** window, under **Results>Displacement (tem)** click **Surface 1**.

2 In the **Surface** settings window, click **Replace Expression** in the upper-right corner of the **Expression** section. From the menu, choose **Joule Heating and Thermal Expansion (Solid Mechanics)>Displacement>Total displacement (tem.disp)**.

3 Locate the **Expression** section. From the **Unit** list, choose **nm**.

 ©2012 COMSOL

4 Click the **Plot** button.

As the color legend shows, the maximum displacement is roughly 88 nm with a constant resistivity.

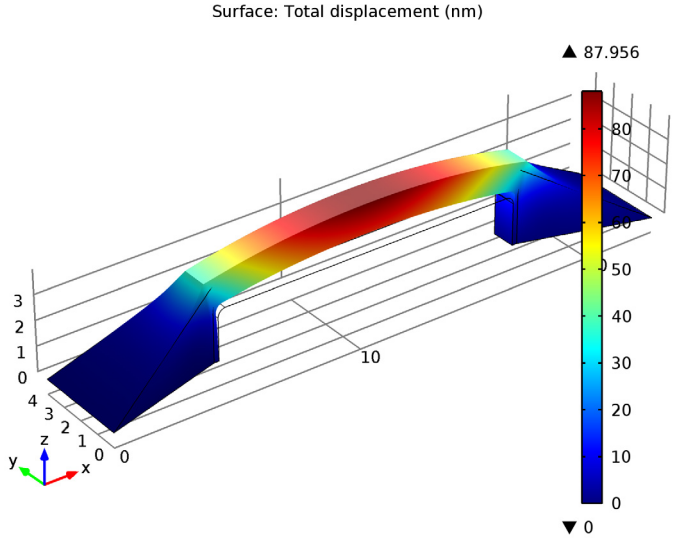

Temperature (tem)

The last default surface plot shows the temperature field. Note the maximum temperature of roughly 1048 K.

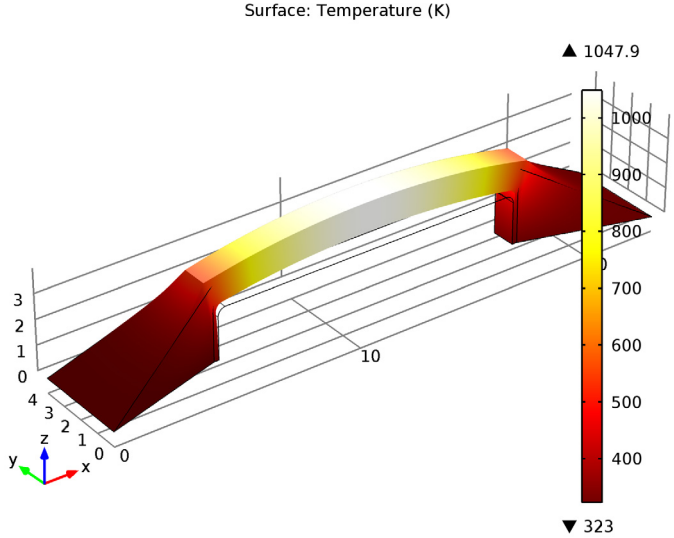

Now restore the temperature dependence of the resistivity that you temporarily disabled and then solve the model again.

JOULE HEATING AND THERMAL EXPANSION

Joule Heating Model 1

1. In the **Model Builder** window, under **Model 1>Joule Heating and Thermal Expansion** click **Joule Heating Model 1**.
2. In the **Joule Heating Model** settings window, locate the **Conduction Current** section.
3. From the α list, choose **From material**.

STUDY 1

In the **Model Builder** window, right-click **Study 1** and choose **Compute**.

RESULTS

Temperature (tem)

As you can see from the plot (also shown in Figure 2) using the more realistic material model with a temperature-dependent resistivity has a significant effect on the solution. The maximum temperature is now almost 340 K lower.

Displacement (tem)

Similarly, the maximum displacement has been reduced from 89 nm to around 50 nm; see also Figure 3.

 ©2012 COMSOL