Busbar

Introduction

- This tutorial model demonstrates the concept of multiphysics modeling in COMSOL Multiphysics®
- A voltage difference is applied between titanium bolts at opposite ends of a copper busbar
  - This is an unwanted mode of operation of the busbar and its effect is assessed
- The voltage difference induces a current flow, which in turn causes the temperature of the busbar to rise
- Results include the electric potential, temperature distribution, and current density of the busbar assembly

Model Overview

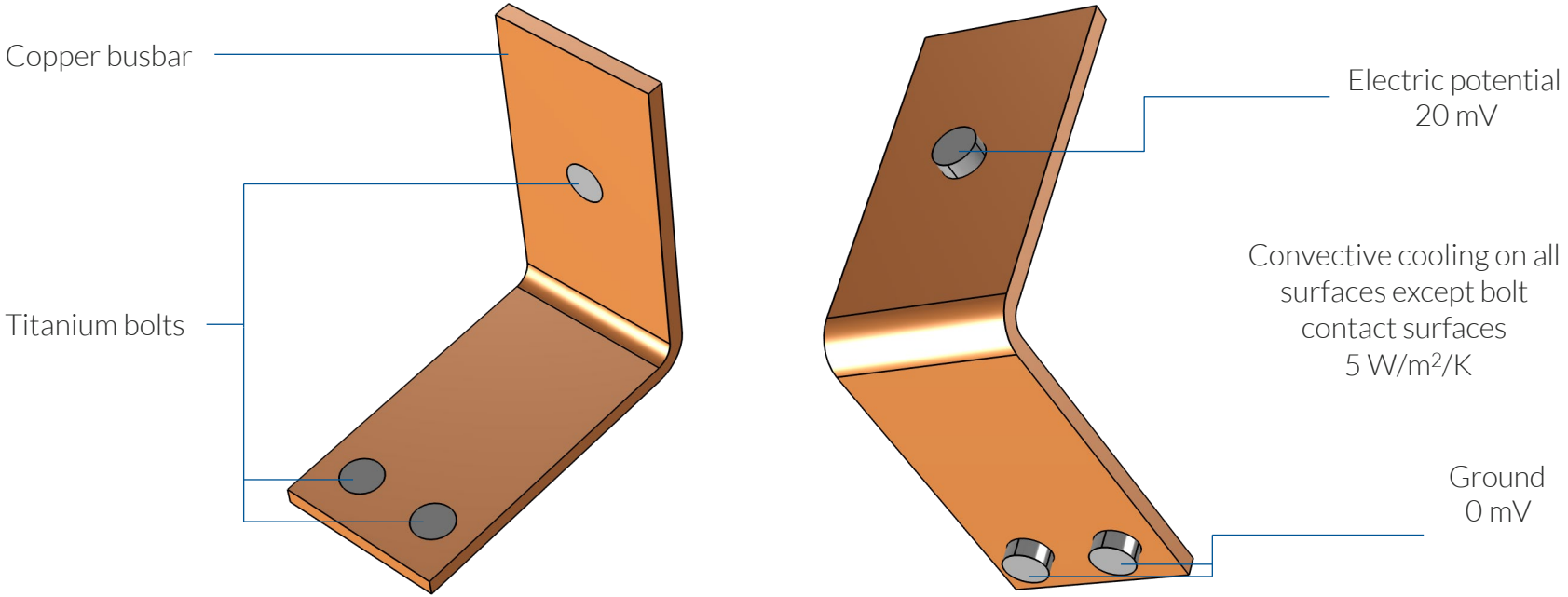

■ Front (left) and back (right) views of the busbar model setup.

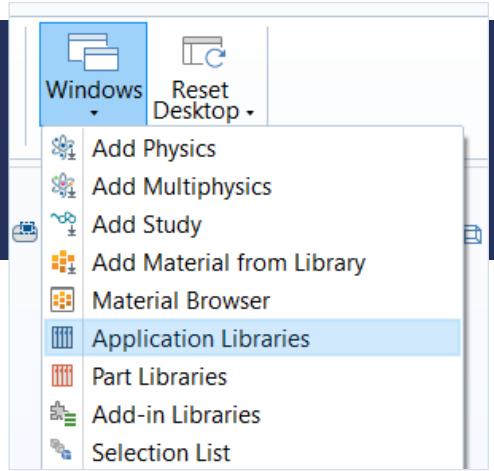

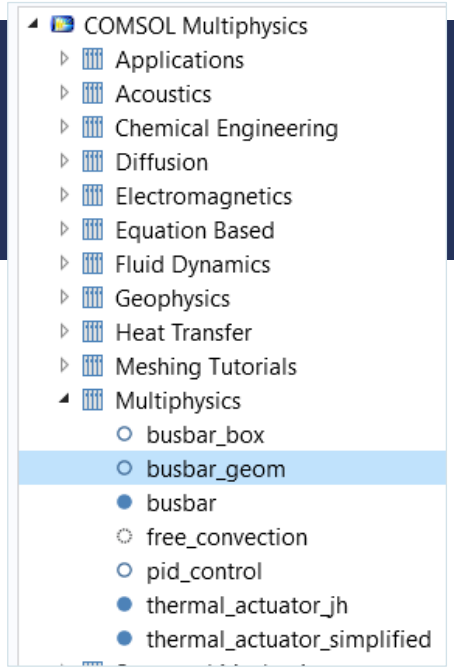

Screenshots of some of the steps performed to obtain the geometry for analysis.

Geometry Setup

- Open the geometry file from the Application Libraries
  - Open the Application Libraries window
  - Navigate to, select, and open the *busbar_geom* model file
  - Build the geometry sequence
- The template model file includes:
  - Parameters
  - Geometry
  - Physics interfaces
  - Study

PHYSICS SETUP

Electric Currents

- Active in all domains
- *Electric Potential* boundary condition
  - Defines an electric potential on the surface
- *Ground* boundary condition
  - Defines zero potential on the surface

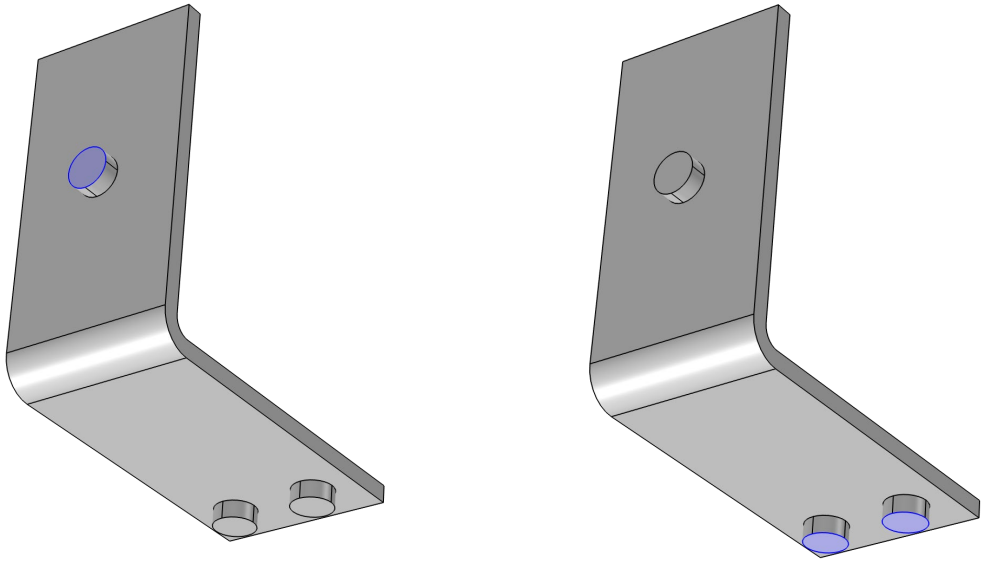

Geometry selection for the Electric Potential *(left) and* Ground *(right) boundary conditions.*

PHYSICS SETUP

Heat Transfer in Solids

- Active in all domains
- *Heat Flux* boundary condition
  - Defines heat transfer from the device to the surrounding air, naturally occurring

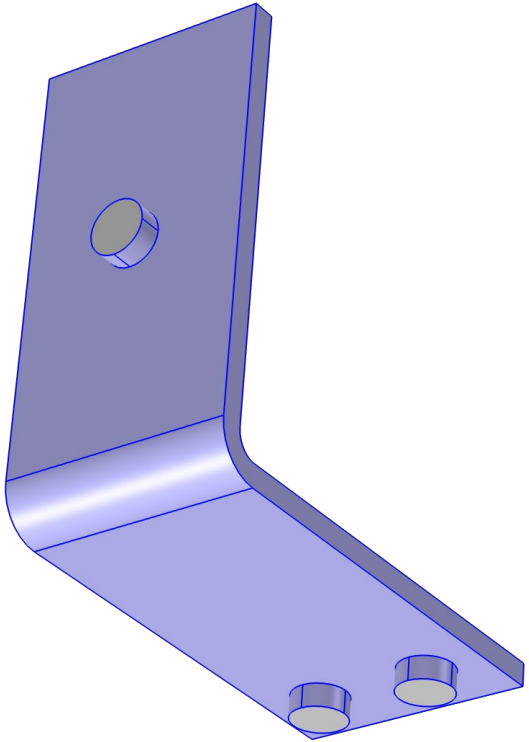

Geometry selection for the Heat Flux *boundary condition.*

MULTIPHYSICS SETUP

Joule Heating

- Active in all domains
- Couples the *Electric Currents* and *Heat Transfer in Solids* physics interfaces
  - Electric Currents
    - Computes losses from passing electric current through the busbar
  - Heat Transfer in Solids
    - Incorporates resistive losses as a source of heat

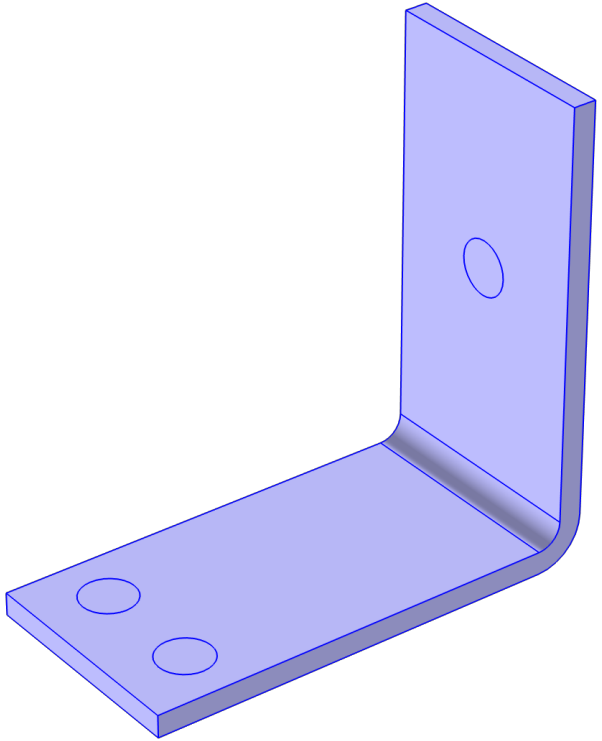

Geometry selection for the Electromagnetic Heating *multiphysics coupling node.*

Results: Electric Potential

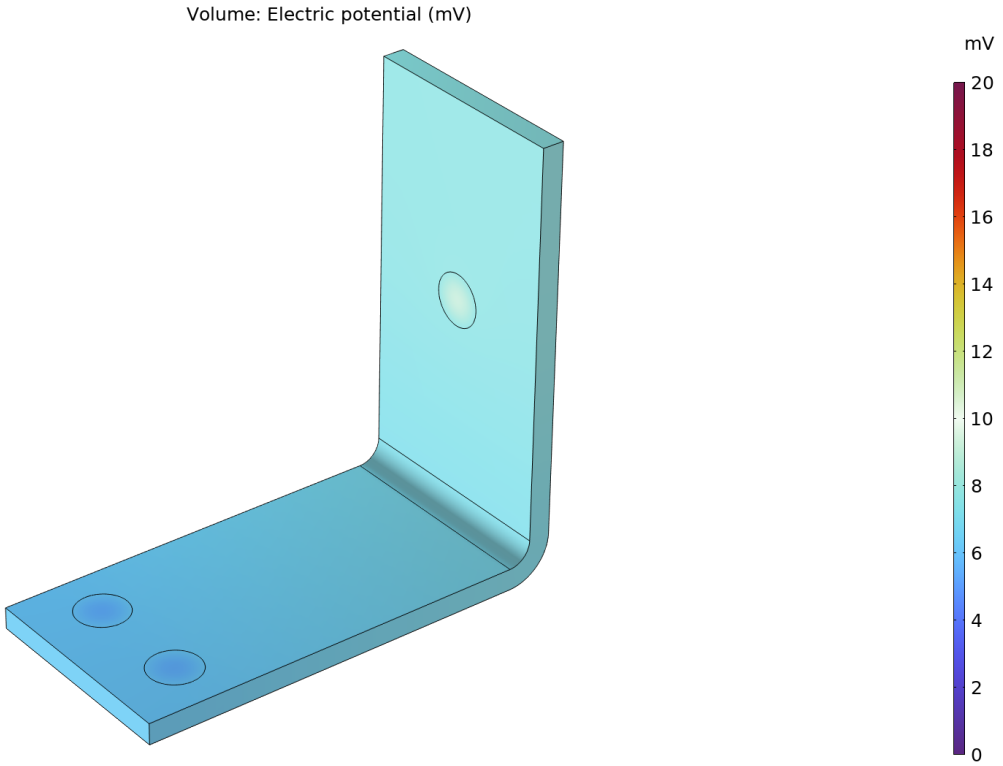

Results: Temperature

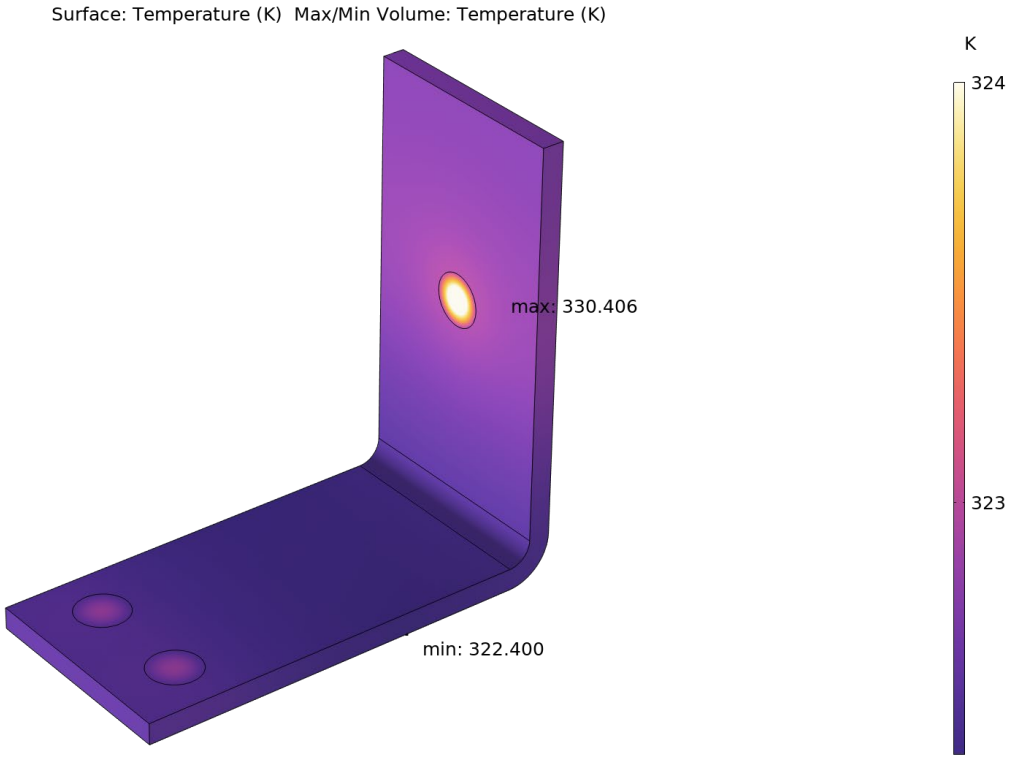

Results: Current Density

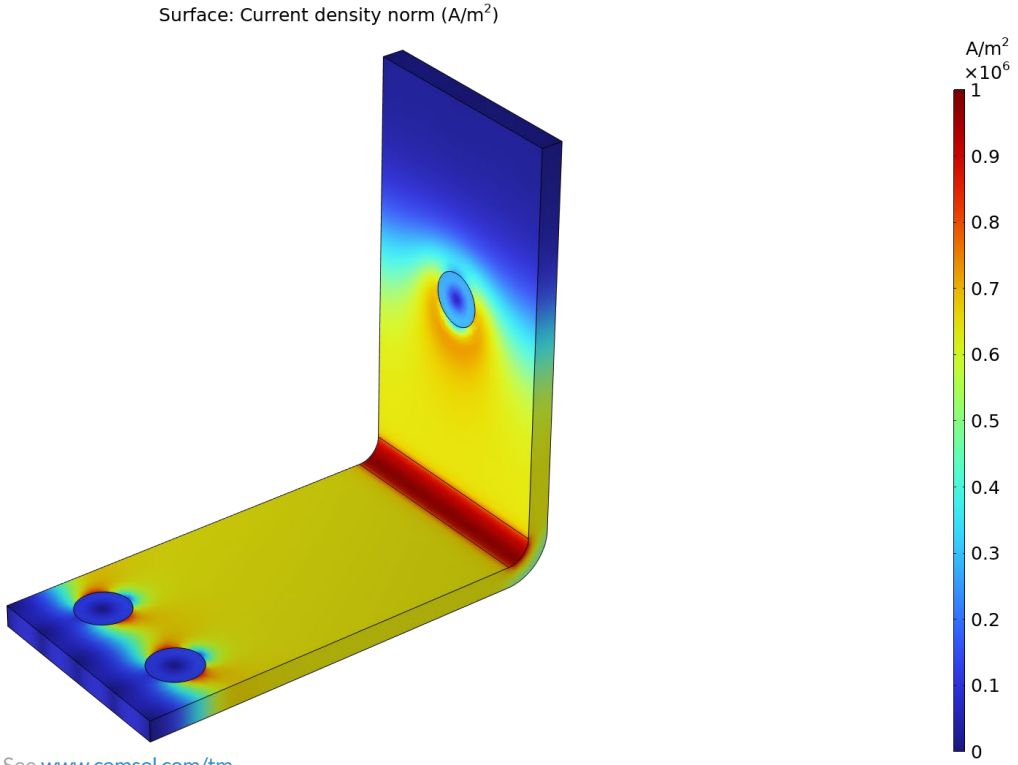

Trademarks are the property of their respective owners. See www.comsol.com/tm.