Micromechanics and Stress Analysis of a Composite Cylinder

Introduction

The use of fiber composites in the manufacturing industry is increasing. Compared to traditional metallic engineering materials, fiber composites are lighter and more corrosion resistant, and properties like strength, stiffness and toughness can often be tailored to a specific application. A fiber composite consists of load carrying fibers embedded in a polymer resin. The composite material is typically a laminate of individual layers, where the fibers in each layer are uni-directional. In this model, we perform a stress analysis of a laminated composite cylinder.

Modeling individual fibers in every layer in the laminate is unfeasible. A simplified micromechanics model of a single carbon fiber in epoxy is instead used to estimate the elastic properties of a single layer. These properties are then used in the homogenized model of the laminated composite cylinder. Two approaches are used to model the laminate, namely the Layerwise (LW) theory, and the Equivalent Single Layer (ESL) theory.

Model Definition

This model performs different types of analyses of a laminated composite cylinder. The model is divided into three parts:

- Micromechanics analysis
- Stress analysis using the Layerwise theory
- Stress analysis using the Equivalent Single Layer theory

Eigenfrequencies and mode shapes are computed and compared using both theories.

MICROMECHANICS ANALYSIS

A micromechanics analysis of a single layer is performed in order to obtain its homogenized material properties. The composite layer is assumed to be made of carbon fibers unidirectionally embedded in epoxy resin. A representative unit cell having a cylindrical fiber located at the middle of resin is shown in Figure 1. The fiber radius is computed assuming a fiber volume fraction of 0.6.

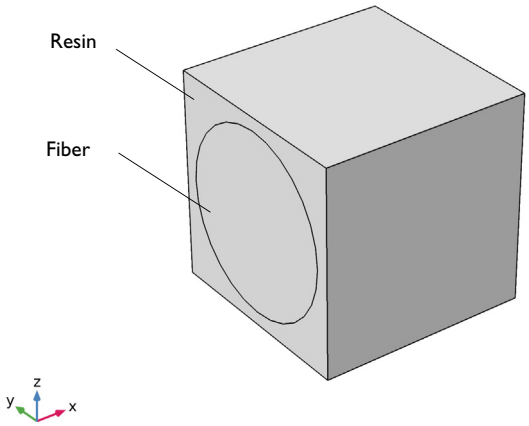

Figure 1: Geometry of the unit cell with a carbon fiber in an epoxy resin.

Fiber and Resin Properties

The layers of the laminate are made of T300 carbon fiber and 914C epoxy. The carbon fiber is assumed transversely isotropic (modeled as orthotropic), and the epoxy resin is assumed isotropic. The material properties of fiber and resin are given in Table 1 and Table 2, respectively.

TABLE 1: CARBON FIBER MATERIAL PROPERTIES

Material Property	Value
$\{E_1, E_2, E_3\}$	{230,15,15}(GPa)
$\{G_{12}, G_{23}, G_{13}\}$	{15,7,15}(GPa)
$\{\upsilon_{12}, \upsilon_{23}, \upsilon_{13}\}$	{0.2,0.07,0.2}
ρ	1800(kg/m^3)

TABLE 2: EPOXY RESIN MATERIAL PROPERTIES

Material Property	Value
E	4(GPa)
υ	0.35
ρ	1100(kg/m^3)

Cell Periodicity

In order to perform a micromechanics analysis, the **Cell Periodicity** node in the **Solid Mechanics** interface is used. The **Cell Periodicity** node is used to apply periodic boundary conditions to the three pairs of faces of the unit cell.

In order to extract the homogenized elasticity matrix for a layer, the unit cell needs to be analyzed for six different load cases. This is automatically done by the **Cell Periodicity** node as it adds a stationary study with six different load groups.

With the **Average Strain** periodicity type chosen, you can obtain a **Global Material** with an elasticity matrix corresponding to that of the homogenized material. This global material can be used to define the properties of individual layers in a composite laminate.

STRESS ANALYSIS USING THE LAYERWISE THEORY

Layerwise (LW) Theory

In the Layerwise theory, the degrees of freedom are the displacements (u, v, w) available on the reference surface (or modeled surface) as well as in the through-thickness direction. From a constitutive equation point of view, this theory is similar to 3D solid elasticity. The layerwise theory is useful for detailed modeling of thick composite laminates because it can capture inter-laminar shear stresses. It could therefore be used to also study delamination.

Geometry and Boundary Conditions

The model geometry of a composite cylinder with length of 0.5 m and radius of 0.1 m is shown in Figure 2. Boundary conditions and loading are:

- One end of the cylinder is fixed.
- The other end has a roller support.
- A load of 1 kN is applied to a quarter of the cylinder outer surface.

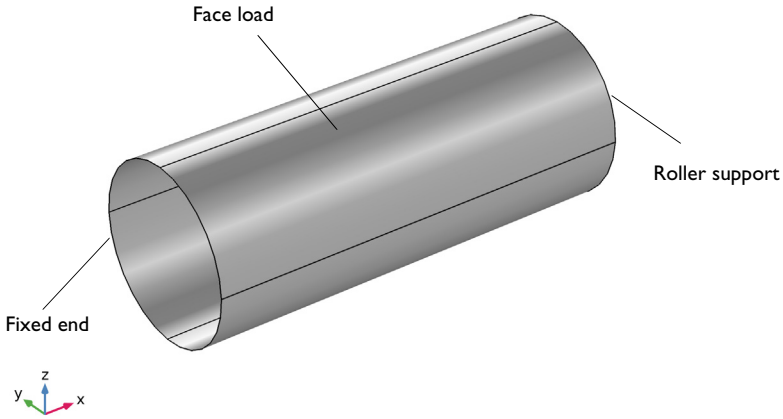

Figure 2: Geometry of the cylinder showing boundary conditions and loading.

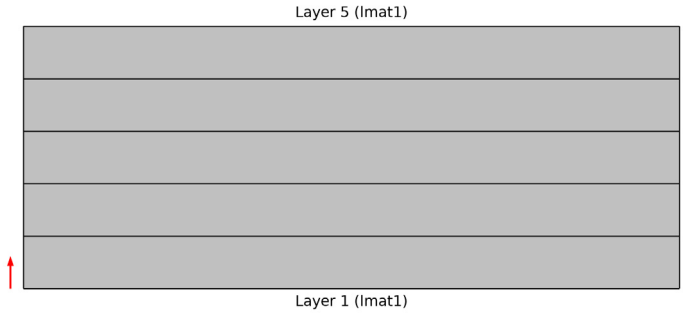

Figure 3: Through-thickness view of the laminated material with five layers.

Stacking Sequence and Material Properties

The laminate consists of five layers of 1 mm thickness, as shown in Figure 3. The orientations of the layers are different. The orientations, starting from the bottom of the laminate, are taken as 0, 45, 90, -45, 0 degrees, as shown in Figure 4. The orientation of a layer is specified with respect to the laminate coordinate system as shown in Figure 5. The material properties for each layer are given by the homogenized material computed in the micromechanics analysis.

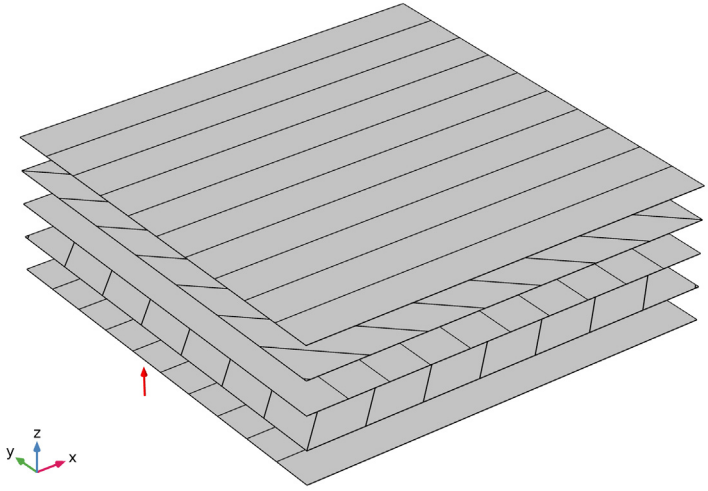

Figure 4: Stacking sequence [0/45/90/-45/0] for the laminate showing the fiber orientation of each layer, from bottom to top.

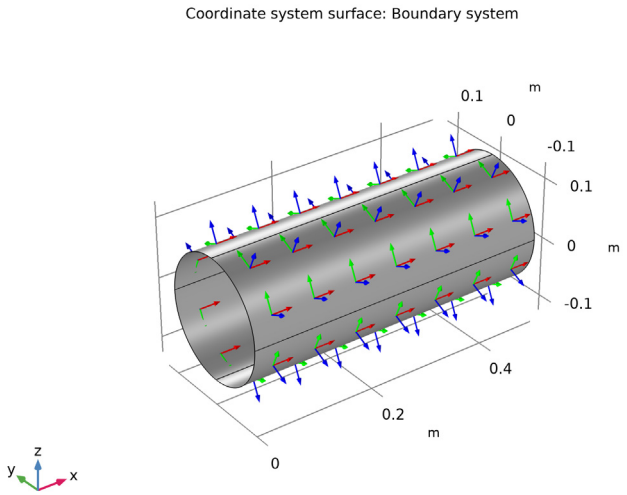

Figure 5: The laminate coordinate system showing the first principal direction along the cylinder axis.

STRESS ANALYSIS USING THE ESL THEORY

Equivalent Single Layer (ESL) Theory

In the equivalent single layer (ESL) theory, the degrees of freedom are the displacements and rotations on the midplane of the laminate. From a constitutive equation point of view, this theory is similar to 3D shell elasticity. Through-thickness homogenized material properties of the laminate are used. It is therefore computationally less expensive than the layerwise theory. It can be used for the modeling of thin to moderately thick laminates with good accuracy. An aim of this analysis is to compare the results to the results obtained from the Layerwise theory.

The model set-up including geometry, boundary conditions, material properties etc. is the same as described in the previous section.

Results and Discussion

In the micromechanics analysis, six load cases are used to evaluate the elasticity matrix. The distribution of effective (von Mises) stress for four of the load cases is shown in Figure 6.

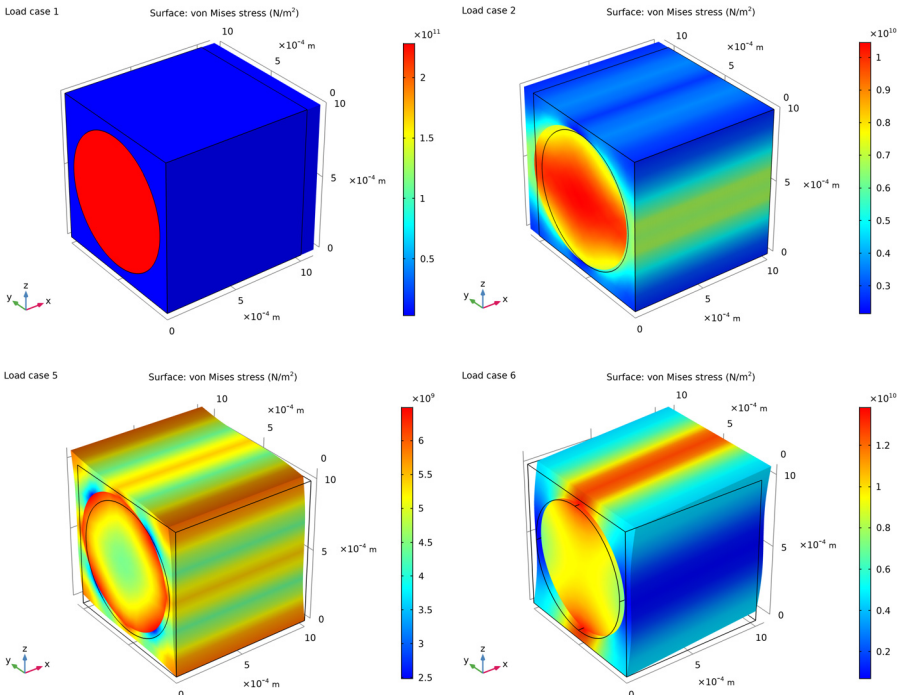

Figure 6: Von Mises stress distribution in the unit cell for four load cases.

The von Mises stress distribution in the composite cylinder obtained from the two theories is presented in Figure 7. Both theories give similar results.

The through-thickness variation of the axial second Piola-Kirchhoff stress at a particular point on the cylinder is shown in Figure 8. We see that the stress variation is discontinuous between layers, but that the two theories predict similar distributions.

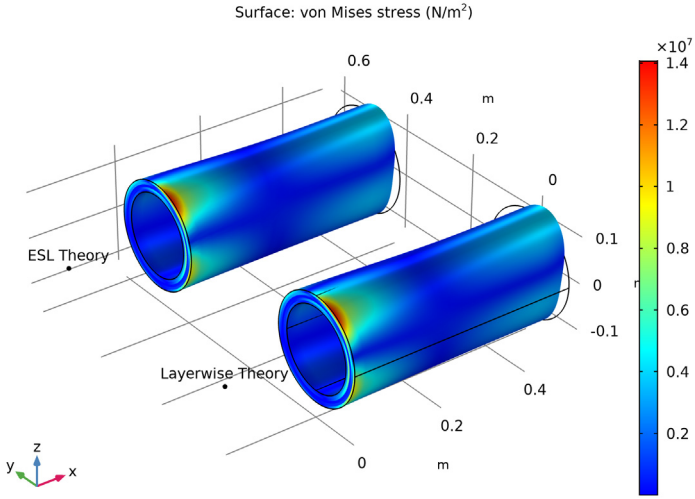

Figure 7: Von Mises stress distribution in the composite cylinder obtained using the Layerwise and ESL theories.

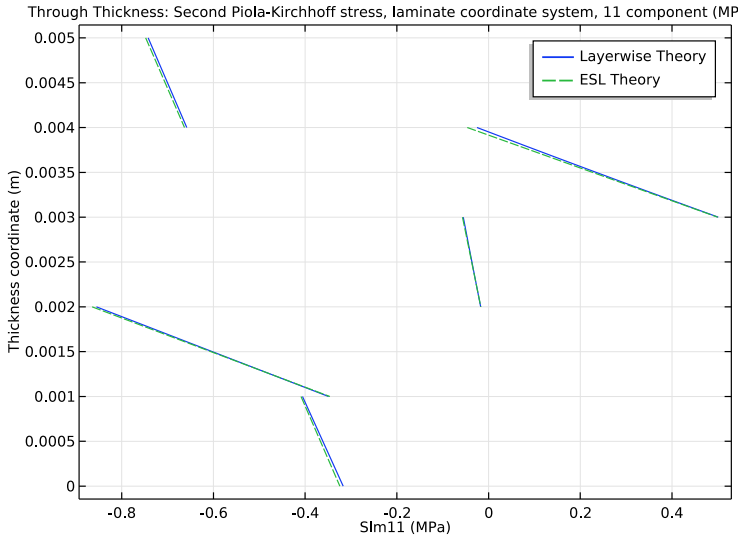

Figure 8: Through-thickness stress variation in the axial direction at a particular point on the cylinder.

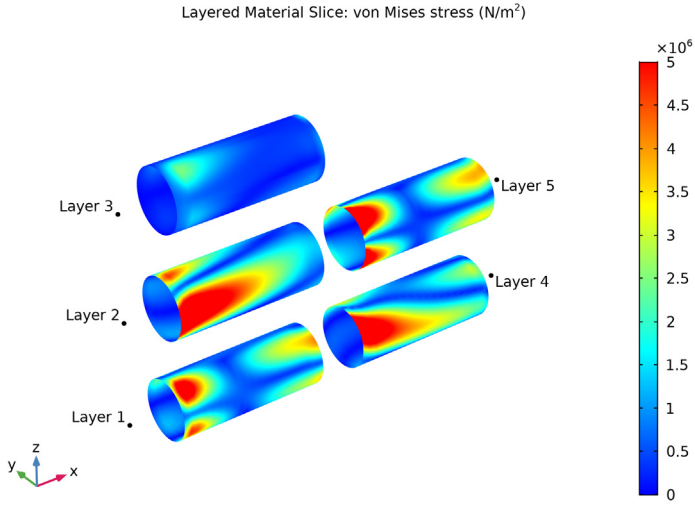

Figure 9: Von Mises stress distribution in the five layers of the laminate.

Figure 9 shows the distribution of von Mises stress in each layer of the laminate using the **Layered Material Slice** plot. The distributions of stress in the individual layers are markedly different. The middle layer, with fibers perpendicular to the first principal laminate direction, shows the lowest stresses.

The first six eigenfrequencies of the constrained cylinder are shown in Table 3, and the corresponding mode shapes are shown in Figure 10. The eigenfrequencies obtained using the LW and ESL theories match closely.

TABLE 3: COMPARISON OF EIGENFREQUENCIES

Eigenfrequencies from layerwise theory (Hz)	Eigenfrequencies from ESL theory (Hz)	Percentage difference (%)
485.98	485.31	0.138
572.7	572.05	0.113
983.85	983.54	0.032
998.96	998.4	0.056
1213.2	1210.6	0.214
1275.4	1273.4	0.157

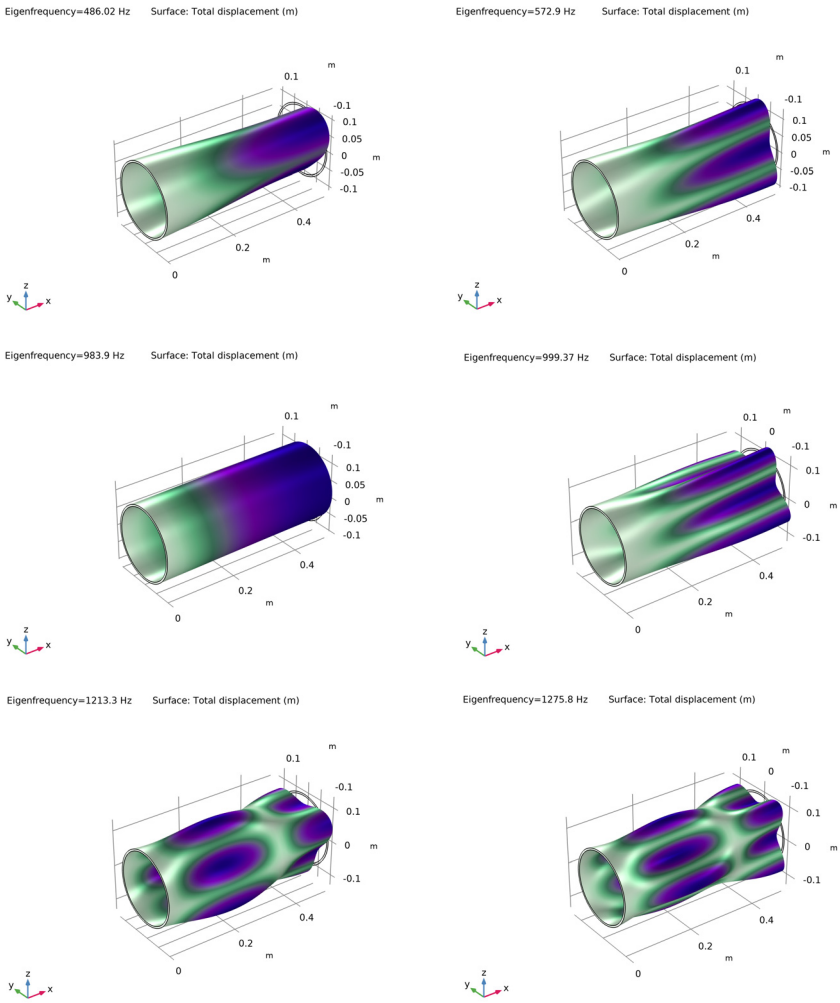

Figure 10: The first six mode shapes and corresponding eigenfrequencies of the cylinder.

Notes About the COMSOL Implementation

- The micromechanics analysis of a single fiber in a resin can be performed using the **Cell Periodicity** node available in the **Solid Mechanics** interface. Using this functionality, the elasticity matrix of the homogenized material can be computed for given fiber and resin properties, and the fiber volume fraction.

- Modeling a composite laminated shell requires a surface geometry (2D), in general called a base surface, and a **Layered Material** node which adds an extra dimension (1D) to the base surface geometry in the surface normal direction. Using the **Layered Material** functionality, you can model several layers of different thickness, material properties, and fiber orientations. You can optionally specify the interface materials between the layers and control mesh elements in each layer.
- You can either use the *Layerwise (LW)* theory based **Layered Shell** interface or the *Equivalent Single Layer (ESL)* theory based **Layered Linear Elastic Material** node in **Shell** interface. Use one of these to apply loads and constraints on different layers of a composite shell and solve for stresses and other relevant variables in each individual layer.
- To analyze the results in a composite shell, you can either create a slice plot using the **Layered Material Slice** plot for in-plane variation of a quantity, or you can create a **Through Thickness** plot for out-of-plane variation of a quantity. To visualize the results as a 3D solid object, you can use the **Layered Material** dataset which creates a virtual 3D solid object combining the surface geometry (2D) and the extra dimension (1D).

Application Library path: `Composite_Materials_Module/Tutorials/composite_cylinder_micromechanics_and_stress_analysis`

Modeling Instructions (Micromechanics)

From the **File** menu, choose **New**.

NEW

In the **New** window, click **Model Wizard**.

MODEL WIZARD

1 In the **Model Wizard** window, click **3D**.

2 In the **Select Physics** tree, select **Structural Mechanics>Solid Mechanics (solid)**.

3 Click **Add**.

4 Click **Done**.

GLOBAL DEFINITIONS

1 In the **Model Builder** window, under **Global Definitions** click **Parameters 1**.

2 In the **Settings** window for **Parameters**, locate the **Parameters** section.

3 Click **Load from File**.

4 Browse to the model's Application Libraries folder and double-click the file `composite_cylinder_micromechanics_and_stress_analysis_parameters.txt`.

GEOMETRY 1

Block 1 (blk1)

1 In the **Geometry** toolbar, click **Block**.

2 In the **Settings** window for **Block**, locate the **Size and Shape** section.

3 In the **Width** text field, type `1`.

4 In the **Depth** text field, type `1`.

5 In the **Height** text field, type `1`.

6 Click **Build Selected**.

Cylinder 1 (cyl1)

1 In the **Geometry** toolbar, click **Cylinder**.

2 In the **Settings** window for **Cylinder**, locate the **Size and Shape** section.

3 In the **Radius** text field, type `r_f`.

4 In the **Height** text field, type `1`.

5 Locate the **Position** section. In the **y** text field, type `1/2`.

6 In the **z** text field, type `1/2`.

7 Locate the **Axis** section. From the **Axis type** list, choose **x-axis**.

8 Click **Build Selected**.

Form Union (fin)

1 In the **Model Builder** window, under **Component 1 (comp1)>Geometry 1** click **Form Union (fin)**.

2 Click **Build Selected**.

SOLID MECHANICS (SOLID)

Linear Elastic Material 2

1 In the **Physics** toolbar, click **Domains** and choose **Linear Elastic Material**.

2 Select Domain 2 only.

3 In the **Settings** window for **Linear Elastic Material**, locate the **Linear Elastic Material** section.

4 From the **Solid model** list, choose **Orthotropic**.

Cell Periodicity 1

1 In the **Physics** toolbar, click **Domains** and choose **Cell Periodicity**.

2 In the **Settings** window for **Cell Periodicity**, locate the **Domain Selection** section.

3 From the **Selection** list, choose **All domains**.

4 Locate the **Periodicity Type** section. From the list, choose **Average strain**.

5 From the **Calculate average properties** list, choose **Elasticity matrix, Standard (XX, YY, ZZ, XY, YZ, XZ)**.

Boundary Pair 1

1 Right-click **Cell Periodicity 1** and choose **Boundary Pair**.

2 In the **Settings** window for **Boundary Pair**, locate the **Boundary Selection** section.

3 Click **Clear Selection**.

4 Select Boundaries 1, 5, 11, and 12 only.

Boundary Pair 2

1 Right-click **Component 1 (comp1)>Solid Mechanics (solid)>Cell Periodicity 1> Boundary Pair 1** and choose **Duplicate**.

2 In the **Settings** window for **Boundary Pair**, locate the **Boundary Selection** section.

3 Click **Clear Selection**.

4 Select Boundaries 2 and 10 only.

Boundary Pair 3

1 Right-click **Component 1 (comp1)>Solid Mechanics (solid)>Cell Periodicity 1> Boundary Pair 2** and choose **Duplicate**.

2 In the **Settings** window for **Boundary Pair**, locate the **Boundary Selection** section.

3 Click **Clear Selection**.

4 Select Boundaries 3 and 4 only.

Cell Periodicity 1

1 In the **Model Builder** window, under **Component 1 (comp1)>Solid Mechanics (solid)** click **Cell Periodicity 1**.

2 In the **Settings** window for **Cell Periodicity**, locate the **Load Group, Material and Study Generation** section.

3 Click **Create**.

MATERIALS

Material 1 (mat1)

1 In the **Model Builder** window, under **Component 1 (comp1)** right-click **Materials** and choose **Blank Material**.

2 In the **Settings** window for **Material**, type `Material 1: Epoxy Resin` in the **Label** text field.

3 Select Domain 1 only.

4 Locate the **Material Contents** section. In the table, enter the following settings:

Property	Variable	Value	Unit	Property group
Young's modulus	E	`E_r`	Pa	Basic
Poisson's ratio	nu	`nu_r`	1	Basic
Density	rho	`rho_r`	kg/m³	Basic

Material 2 (mat2)

1 Right-click **Materials** and choose **Blank Material**.

2 In the **Settings** window for **Material**, type `Material 2: Carbon Fiber` in the **Label** text field.

3 Locate the **Geometric Entity Selection** section. Click **Paste Selection**.

4 In the **Paste Selection** dialog box, type `2` in the **Selection** text field.

5 Click **OK**.

6 In the **Settings** window for **Material**, locate the **Material Contents** section.

7 In the table, enter the following settings:

Property	Variable	Value	Unit	Property group
Young's modulus	{Evector1, Evector2, Evector3}	`{E1_f, E2_f, E2_f}`	Pa	Orthotropic
Poisson's ratio	{nuvector1, nuvector2, nuvector3}	`{nu12_f, nu23_f, nu12_f}`	1	Orthotropic
Shear modulus	{Gvector1, Gvector2, Gvector3}	`{G12_f, G23_f, G12_f}`	N/m²	Orthotropic
Density	rho	`rho_f`	kg/m³	Basic

MESH 1

Free Triangular 1

1 In the **Model Builder** window, under **Component 1 (comp1)** right-click **Mesh 1** and choose **More Operations>Free Triangular**.

2 Select Boundaries 1 and 5 only.

3 In the **Settings** window for **Free Triangular**, click **Build Selected**.

Swept 1

1 In the **Model Builder** window, right-click **Mesh 1** and choose **Swept**.

2 Click **Build Selected**.

CELL PERIODICITY STUDY

In the **Home** toolbar, click **Compute**.

RESULTS

Stress (solid)

Use the following instructions to plot the von Mises stress in the unit cell as shown in Figure 6.

1 In the **Model Builder** window, under **Results** click **Stress (solid)**.

2 In the **Settings** window for **3D Plot Group**, type `Stress, Unit Cell` in the **Label** text field.

3 In the **Stress, Unit Cell** toolbar, click **Plot**.

Global Matrix Evaluation 1

1 In the **Results** toolbar, click **More Derived Values** and choose **Other>Global Matrix Evaluation**.

2 In the **Settings** window for **Global Matrix Evaluation**, locate the **Data** section.

3 From the **Parameter selection (Load case)** list, choose **Last**.

4 Locate the **Expression** section. Click **solid.cp1.D - Elasticity matrix - Pa** in the upper-right corner of the section. Click **Evaluate**.

Modeling Instructions (Stress Analysis using the Layerwise (LW) Theory)

This section describes how to model a laminated composite cylinder using the layerwise theory based **Layered Shell** interface.

ROOT

In the **Home** toolbar, click **Component** and choose **Add Component>3D**.

GEOMETRY 2

In the **Model Builder** window, under **Component 2 (comp2)** click **Geometry 2**.

Cylinder 1 (cyl1)

1 In the **Geometry** toolbar, click **Cylinder**.

2 In the **Settings** window for **Cylinder**, locate the **Object Type** section.

3 From the **Type** list, choose **Surface**.

4 Locate the **Size and Shape** section. In the **Radius** text field, type `rc`.

5 In the **Height** text field, type `hc`.

6 Locate the **Axis** section. From the **Axis type** list, choose **x-axis**.

7 Click **Build Selected**.

DEFINITIONS (COMP2)

Boundary System 2 (sys2)

1 In the **Model Builder** window, expand the **Component 2 (comp2)>Definitions** node, then click **Boundary System 2 (sys2)**.

2 In the **Settings** window for **Boundary System**, locate the **Settings** section.

3 Find the **Coordinate names** subsection. From the **Axis** list, choose **x**.

ADD PHYSICS

1 In the **Home** toolbar, click **Add Physics** to open the **Add Physics** window.

2 Go to the **Add Physics** window.

3 In the tree, select **Structural Mechanics>Layered Shell (lshell)**.

4 Find the **Physics interfaces in study** subsection. In the table, clear the **Solve** check box for **Cell periodicity study**.

5 Click **Add to Component** in the window toolbar.

6 In the **Home** toolbar, click **Add Physics** to close the **Add Physics** window.

GLOBAL DEFINITIONS

Layered Material 1 (lmat1)

1 In the **Model Builder** window, under **Global Definitions** right-click **Materials** and choose **Layered Material**.

2 In the **Settings** window for **Layered Material**, type `Layered Material: [0/45/90/-45/0]` in the **Label** text field.

3 Locate the **Layer Definition** section. In the table, enter the following settings:

Layer	Material	Rotation (deg)	Thickness (m)	Mesh elements
Layer 1	Homogeneous Material 1 (cp1mat)	0	th	1

4 Click **Add**.

5 In the table, enter the following settings:

Layer	Material	Rotation (deg)	Thickness (m)	Mesh elements
Layer 2	cp1mat	45	th	1

6 Click **Add**.

7 In the table, enter the following settings:

Layer	Material	Rotation (deg)	Thickness (m)	Mesh elements
Layer 3	cp1mat	90	th	1

8 Click **Add**.

9 In the table, enter the following settings:

Layer	Material	Rotation (deg)	Thickness (m)	Mesh elements
Layer 4	cp1mat	-45	th	1

10 Click **Add**.

11 In the table, enter the following settings:

Layer	Material	Rotation (deg)	Thickness (m)	Mesh elements
Layer 5	cp1mat	0	th	1

12 Click to expand the **Preview Plot Settings** section. In the **Thickness-to-width ratio** text field, type `0.4`.

13 Locate the **Layer definition** section. Click **Layer Cross Section Preview** in the upper-right corner of the section.

14 Click **Layer Stack Preview** in the upper-right corner of the **Layer definition** section.

MATERIALS

In the **Model Builder** window, under **Component 2 (comp2)** right-click **Materials** and choose **Layers>Layered Material Link**.

GLOBAL DEFINITIONS

Homogeneous Material 1 (cp1mat)

1 In the **Settings** window for **Material**, locate the **Material Contents** section.

2 In the table, enter the following settings:

Property	Variable	Value	Unit	Property group
Density	rho	rho_1	kg/m³	Basic

LAYERED SHELL (LSHELL)

Linear Elastic Material 1

1 In the **Model Builder** window, under **Component 2 (comp2)>Layered Shell (lshell)** click **Linear Elastic Material 1**.

2 In the **Settings** window for **Linear Elastic Material**, locate the **Linear Elastic Material** section.

3 From the **Solid model** list, choose **Anisotropic**.

Fixed Constraint 1

1 In the **Physics** toolbar, click **Edges** and choose **Fixed Constraint**.

2 Select Edges 1, 2, 4, and 6 only.

Roller 1

1 In the **Physics** toolbar, click **Edges** and choose **Roller**.

2 Select Edges 9–12 only.

Body Load 1

1 In the **Physics** toolbar, click **Boundaries** and choose **Body Load**.

2 Select Boundary 2 only.

3 In the **Settings** window for **Body Load**, locate the **Force** section.

4 From the **Load type** list, choose **Total force**.

5 Specify the $\mathbf{F}_{\text{tot}}$ vector as

0	x

0	y
Ftot	z

MESH 2

Mapped 1

1 In the **Model Builder** window, under **Component 2 (comp2)** right-click **Mesh 2** and choose **More Operations>Mapped**.

2 In the **Settings** window for **Mapped**, locate the **Boundary Selection** section.

3 From the **Selection** list, choose **All boundaries**.

Distribution 1

1 Right-click **Component 2 (comp2)>Mesh 2>Mapped 1** and choose **Distribution**.

2 In the **Settings** window for **Distribution**, locate the **Edge Selection** section.

3 From the **Selection** list, choose **All edges**.

4 Locate the **Distribution** section. In the **Number of elements** text field, type `20`.

5 Click **Build All**.

ADD STUDY

1 In the **Home** toolbar, click **Add Study** to open the **Add Study** window.

2 Go to the **Add Study** window.

3 Find the **Studies** subsection. In the **Select Study** tree, select **General Studies>Stationary**.

4 Find the **Physics interfaces in study** subsection. In the table, clear the **Solve** check box for **Solid Mechanics (solid).**

5 Click **Add Study** in the window toolbar.

6 In the **Home** toolbar, click **Add Study** to close the **Add Study** window.

STUDY 1

1 In the **Settings** window for **Study**, type `Study 1: Stationary (Layerwise Theory)` in the **Label** text field.

2 In the **Home** toolbar, click **Compute**.

RESULTS

Layered Material 1

1 In the **Model Builder** window, expand the **Results>Data Sets** node, then click **Layered Material 1**.

2 In the **Settings** window for **Layered Material**, locate the **Layers** section.

3 In the **Scale** text field, type `5`.

Cut Point 3D 1

1 In the **Results** toolbar, click **Cut Point 3D**.

2 In the **Settings** window for **Cut Point 3D**, locate the **Data** section.

3 From the **Data set** list, choose **Study 1: Stationary (Layerwise Theory)/ Solution 1a (3) (sol1)**.

4 Locate the **Point Data** section. In the **X** text field, type `hc/2`.

5 In the **Y** text field, type `rc`.

6 In the **Z** text field, type `rc`.

7 Select the **Snap to closest boundary** check box.

Use the following instructions to plot the von Mises stress in the cylinder as shown in Figure 7.

Stress (lshell)

1 In the **Model Builder** window, under **Results** click **Stress (lshell)**.

2 In the **Settings** window for **3D Plot Group**, type `Stress (mises)` in the **Label** text field.

Annotation 1

1 Right-click **Results>Stress (mises)** and choose **Annotation**.

2 In the **Settings** window for **Annotation**, locate the **Annotation** section.

3 In the **Text** text field, type `Layerwise Theory`.

4 Locate the **Position** section. In the **x** text field, type `-2*hc/5`.

5 Locate the **Coloring and Style** section. From the **Anchor point** list, choose **Lower middle**.

6 In the **Stress (mises)** toolbar, click **Plot**.

Use the following instructions to plot the axial through-thickness stress variation at a particular point on the cylinder as shown in Figure 8.

Stress, Through Thickness (lshell)

1 In the **Model Builder** window, under **Results** click **Stress, Through Thickness (lshell)**.

2 In the **Settings** window for **1D Plot Group**, type `Stress, Through-Thickness (Slm11)` in the **Label** text field.

3 Locate the **Plot Settings** section. Select the **x-axis label** check box.

4 In the associated text field, type `Slm11 (MPa)`.

Through Thickness 1

1 In the **Model Builder** window, expand the **Results>Stress, Through-Thickness (Slm11)** node, then click **Through Thickness 1**.

2 In the **Settings** window for **Through Thickness**, locate the **Data** section.

3 From the **Data set** list, choose **Cut Point 3D 1**.

4 Locate the **x-Axis Data** section. In the **Expression** text field, type `lshell.Slm11`.

5 From the **Unit** list, choose **MPa**.

6 Click to expand the **Legends** section. From the **Legends** list, choose **Manual**.

7 In the table, enter the following settings:

Legends
`Layerwise Theory`

8 In the **Stress, Through-Thickness (Slm11)** toolbar, click **Plot**.

Use the following instructions to plot the von Mises stress in different layers of the cylinder as shown in Figure 9.

Stress, Slice (lshell)

1 In the **Model Builder** window, expand the **Results>Stress, Slice (lshell)** node, then click **Stress, Slice (lshell)**.

2 In the **Settings** window for **3D Plot Group**, type `Stress, Slice (mises)` in the **Label** text field.

3 Locate the **Plot Settings** section. Clear the **Plot data set edges** check box.

4 Click the **Zoom Extents** button in the **Graphics** toolbar.

5 From the **View** list, choose **New view**.

6 In the **Stress, Slice (mises)** toolbar, click **Plot**.

Layered Material Slice 1

1 In the **Model Builder** window, under **Results>Stress, Slice (mises)** click **Layered Material Slice 1**.

2 In the **Settings** window for **Layered Material Slice**, locate the **Through-Thickness Location** section.

3 In the **Local z-coordinate [-1,1]** text field, type `-0.8`.

4 Click to expand the **Range** section. Select the **Manual color range** check box.

5 In the **Minimum** text field, type `0`.

6 In the **Maximum** text field, type `5e6`.

7 Click to expand the **Quality** section. From the **Resolution** list, choose **No refinement**.

Deformation 1

1 In the **Model Builder** window, expand the **Layered Material Slice 1** node, then click **Deformation 1**.

2 In the **Settings** window for **Deformation**, locate the **Expression** section.

3 In the **X component** text field, type `0`.

4 In the **Y component** text field, type `0`.

5 In the **Z component** text field, type `0`.

6 Locate the **Scale** section. Select the **Scale factor** check box.

7 In the associated text field, type `1`.

8 In the **Stress, Slice (mises)** toolbar, click **Plot**.

Layered Material Slice 2

1 In the **Model Builder** window, under **Results>Stress, Slice (mises)** right-click **Layered Material Slice 1** and choose **Duplicate**.

2 In the **Settings** window for **Layered Material Slice**, locate the **Through-Thickness Location** section.

3 In the **Local z-coordinate [-1,1]** text field, type `-0.4`.

4 Click to expand the **Title** section. From the **Title type** list, choose **None**.

5 Click to expand the **Inherit Style** section. From the **Plot** list, choose **Layered Material Slice 1**.

Deformation 1

1 In the **Model Builder** window, expand the **Layered Material Slice 2** node, then click **Deformation 1**.

2 In the **Settings** window for **Deformation**, locate the **Expression** section.

3 In the **Z component** text field, type `3.5*rc`.

4 In the **Stress, Slice (mises)** toolbar, click **Plot**.

Layered Material Slice 3

1 In the **Model Builder** window, under **Results>Stress, Slice (mises)** right-click **Layered Material Slice 2** and choose **Duplicate**.

2 In the **Settings** window for **Layered Material Slice**, locate the **Through-Thickness Location** section.

3 In the **Local z-coordinate [-1,1]** text field, type `0`.

Deformation 1

1 In the **Model Builder** window, expand the **Layered Material Slice 3** node, then click **Deformation 1**.

2 In the **Settings** window for **Deformation**, locate the **Expression** section.

3 In the **Z component** text field, type `7*rc`.

4 In the **Stress, Slice (mises)** toolbar, click **Plot**.

Layered Material Slice 4

1 In the **Model Builder** window, under **Results>Stress, Slice (mises)** right-click **Layered Material Slice 3** and choose **Duplicate**.

2 In the **Settings** window for **Layered Material Slice**, locate the **Through-Thickness Location** section.

3 In the **Local z-coordinate [-1,1]** text field, type `0.4`.

Deformation 1

1 In the **Model Builder** window, expand the **Layered Material Slice 4** node, then click **Deformation 1**.

2 In the **Settings** window for **Deformation**, locate the **Expression** section.

3 In the **X component** text field, type `1.3*hc`.

4 In the **Z component** text field, type `0`.

5 In the **Stress, Slice (mises)** toolbar, click **Plot**.

Layered Material Slice 5

1 In the **Model Builder** window, under **Results>Stress, Slice (mises)** right-click **Layered Material Slice 4** and choose **Duplicate**.

2 In the **Settings** window for **Layered Material Slice**, locate the **Through-Thickness Location** section.

3 In the **Local z-coordinate [-1,1]** text field, type `0.8`.

Deformation 1

1 In the **Model Builder** window, expand the **Layered Material Slice 5** node, then click **Deformation 1**.

2 In the **Settings** window for **Deformation**, locate the **Expression** section.

3 In the **Z component** text field, type `3.5*rc`.

4 In the **Stress, Slice (mises)** toolbar, click **Plot**.

Annotation 1

1 In the **Model Builder** window, under **Results** right-click **Stress, Slice (mises)** and choose **Annotation**.

2 In the **Settings** window for **Annotation**, locate the **Annotation** section.

3 In the **Text** text field, type `Layer 1`.

4 Locate the **Position** section. In the **X** text field, type `-hc/4`.

5 Locate the **Coloring and Style** section. From the **Anchor point** list, choose **Lower right**.

Annotation 2

1 Right-click **Results>Stress, Slice (mises)>Annotation 1** and choose **Duplicate**.

2 In the **Settings** window for **Annotation**, locate the **Annotation** section.

3 In the **Text** text field, type `Layer 2`.

4 Locate the **Position** section. In the **Z** text field, type `3.5*rc`.

Annotation 3

1 Right-click **Results>Stress, Slice (mises)>Annotation 2** and choose **Duplicate**.

2 In the **Settings** window for **Annotation**, locate the **Annotation** section.

3 In the **Text** text field, type `Layer 3`.

4 Locate the **Position** section. In the **Z** text field, type `7*rc`.

Annotation 4

1 Right-click **Results>Stress, Slice (mises)>Annotation 3** and choose **Duplicate**.

2 In the **Settings** window for **Annotation**, locate the **Annotation** section.

3 In the **Text** text field, type `Layer 4`.

4 Locate the **Position** section. In the **X** text field, type `2.5*hc`.

5 In the **Z** text field, type `0`.

6 Locate the **Coloring and Style** section. From the **Anchor point** list, choose **Upper left**.

Annotation 5

1 Right-click **Results>Stress, Slice (mises)>Annotation 4** and choose **Duplicate**.

2 In the **Settings** window for **Annotation**, locate the **Annotation** section.

3 In the **Text** text field, type `Layer 5`.

4 Locate the **Position** section. In the **Z** text field, type `3.5*rc`.

5 In the **Stress, Slice (mises)** toolbar, click **Plot**.

Use the following instructions to plot the laminate coordinate system of the cylinder.

3D Plot Group 5

1 In the **Home** toolbar, click **Add Plot Group** and choose **3D Plot Group**.

2 In the **Settings** window for **3D Plot Group**, type `Laminate Coordinate System` in the **Label** text field.

3 Locate the **Data** section. From the **Data set** list, choose **Study 1: Stationary (Layerwise Theory)/Solution 1a (3) (sol1)**.

Laminate Coordinate System

In the **Model Builder** window, expand the **Results>Laminate Coordinate System** node.

Surface 1

1 Right-click **Laminate Coordinate System** and choose **Surface**.

2 In the **Settings** window for **Surface**, locate the **Expression** section.

3 In the **Expression** text field, type `dom`.

4 Click to expand the **Title** section. From the **Title type** list, choose **None**.

5 Locate the **Coloring and Style** section. From the **Coloring** list, choose **Uniform**.

6 From the **Color** list, choose **Gray**.

Laminate Coordinate System

In the **Model Builder** window, under **Results** click **Laminate Coordinate System**.

Coordinate System Surface 1

1 In the **Laminate Coordinate System** toolbar, click **More Plots** and choose **Coordinate System Surface**.

2 In the **Settings** window for **Coordinate System Surface**, locate the **Coordinate System** section.

3 From the **Coordinate system** list, choose **Boundary System 2 (sys2)**.

4 Locate the **Coloring and Style** section. In the **Number of arrows** text field, type `50`.

5 Click the **Zoom Extents** button in the **Graphics** toolbar.

6 In the **Laminate Coordinate System** toolbar, click **Plot**.

ADD STUDY

1 In the **Home** toolbar, click **Add Study** to open the **Add Study** window.

2 Go to the **Add Study** window.

3 Find the **Studies** subsection. In the **Select Study** tree, select **General Studies> Eigenfrequency**.

4 Find the **Physics interfaces in study** subsection. In the table, clear the **Solve** check box for **Solid Mechanics (solid).**

5 Click **Add Study** in the window toolbar.

6 In the **Home** toolbar, click **Add Study** to close the **Add Study** window.

STUDY 2

In the **Settings** window for **Study**, type `Study 2: Eigenfrequency (Layerwise Theory)` in the **Label** text field.

STUDY 2: EIGENFREQUENCY (LAYERWISE THEORY)

Step 1: Eigenfrequency

1 In the **Model Builder** window, under **Study 2: Eigenfrequency (Layerwise Theory)** click **Step 1: Eigenfrequency**.

2 In the **Settings** window for **Eigenfrequency**, locate the **Study Settings** section.

3 Select the **Desired number of eigenfrequencies** check box.

4 In the associated text field, type `12`.

5 In the **Home** toolbar, click **Compute**.

Use the following instructions to plot mode shapes and eigenfrequencies as shown in Figure 10.

RESULTS

Mode Shape (lshell)

1 In the **Model Builder** window, under **Results** click **Mode Shape (lshell)**.

2 In the **Settings** window for **3D Plot Group**, type `Mode Shape (Layerwise Theory)` in the **Label** text field.

3 Locate the **Plot Settings** section. From the **View** list, choose **New view**.

4 Click the **Zoom Extents** button in the **Graphics** toolbar.

5 In the **Mode Shape (Layerwise Theory)** toolbar, click **Plot**.

Modeling Instructions (Stress Analysis using the Equivalent Single Layer (ESL) Theory)

This section describes how to model a laminated composite cylinder using the equivalent single layer (ESL) theory based **Shell** interface.

GEOMETRY 2

Move 1 (mov1)

1 In the **Geometry** toolbar, click **Transforms** and choose **Move**.

2 Select the object **cyl1** only.

3 In the **Settings** window for **Move**, locate the **Input** section.

4 Select the **Keep input objects** check box.

5 Locate the **Displacement** section. In the **y** text field, type `hc`.

6 Click **Build Selected**.

LAYERED SHELL (LSHELL)

1 In the **Model Builder** window, under **Component 2 (comp2)** click **Layered Shell (lshell)**.

2 In the **Settings** window for **Layered Shell**, locate the **Boundary Selection** section.

3 In the list, choose **5**, **6**, **7**, and **8**.

4 Click **Remove from Selection**.

5 Select Boundaries 1–4 only.

ADD PHYSICS

1 In the **Home** toolbar, click **Add Physics** to open the **Add Physics** window.

2 Go to the **Add Physics** window.

3 In the tree, select **Structural Mechanics>Shell (shell)**.

4 Find the **Physics interfaces in study** subsection. In the table, clear the **Solve** check box for **Cell periodicity study**, **Study 1: Stationary (Layerwise Theory)** and **Study 2: Eigenfrequency (Layerwise Theory)**.

5 Click **Add to Component** in the window toolbar.

6 In the **Home** toolbar, click **Add Physics** to close the **Add Physics** window.

SHELL (SHELL)

1 In the **Model Builder** window's toolbar, click the **Show** button and select **Advanced Physics Options** in the menu.

2 In the **Settings** window for **Shell**, locate the **Boundary Selection** section.

3 In the list, choose **1**, **2**, **3**, and **4**.

4 Click **Remove from Selection**.

5 Select Boundaries 5–8 only.

6 Click to expand the **Advanced Settings** section. Clear the **Use MITC interpolation** check box.

Layered Linear Elastic Material 1

1 In the **Physics** toolbar, click **Boundaries** and choose **Layered Linear Elastic Material**.

2 In the **Settings** window for **Layered Linear Elastic Material**, locate the **Boundary Selection** section.

3 From the **Selection** list, choose **All boundaries**.

4 Locate the **Linear Elastic Material** section. From the **Solid model** list, choose **Anisotropic**.

Fixed Constraint 1

1 In the **Physics** toolbar, click **Edges** and choose **Fixed Constraint**.

2 Select Edges 9, 10, 12, and 14 only.

Symmetry 1

1 In the **Physics** toolbar, click **Edges** and choose **Symmetry**.

2 Select Edges 21–24 only.

Face Load 1

1 In the **Physics** toolbar, click **Boundaries** and choose **Face Load**.

2 Click the **Go to Default View** button in the **Graphics** toolbar.

3 Select Boundary 6 only.

4 In the **Settings** window for **Face Load**, locate the **Force** section.

5 From the **Load type** list, choose **Total force**.

6 Specify the $\mathbf{F}_{\text{tot}}$ vector as

0	x
0	y
Ftot	z

ADD STUDY

1 In the **Home** toolbar, click **Add Study** to open the **Add Study** window.

2 Go to the **Add Study** window.

3 Find the **Studies** subsection. In the **Select Study** tree, select **General Studies>Stationary**.

4 Find the **Physics interfaces in study** subsection. In the table, clear the **Solve** check box for **Solid Mechanics (solid)** and **Layered Shell (lshell).**

5 Click **Add Study** in the window toolbar.

6 In the **Home** toolbar, click **Add Study** to close the **Add Study** window.

STUDY 3

1 In the **Settings** window for **Study**, type `Study 3: Stationary (ESL Theory)` in the **Label** text field.

2 Locate the **Study Settings** section. Clear the **Generate default plots** check box.

3 In the **Home** toolbar, click **Compute**.

RESULTS

Layered Material 3

1 In the **Model Builder** window, under **Results>Data Sets** right-click **Layered Material 1** and choose **Duplicate**.

2 In the **Settings** window for **Layered Material**, locate the **Data** section.

3 From the **Data set** list, choose **Study 3: Stationary (ESL Theory)/Solution 3 (7) (sol3)**.

Cut Point 3D 2

1 In the **Model Builder** window, under **Results>Data Sets** right-click **Cut Point 3D 1** and choose **Duplicate**.

2 In the **Settings** window for **Cut Point 3D**, locate the **Point Data** section.

3 In the **Y** text field, type `hc+rc`.

4 Locate the **Data** section. From the **Data set** list, choose **Study 3: Stationary (ESL Theory)/ Solution 3 (7) (sol3)**.

Use the following instructions to plot the von Mises stress obtained using the ESL theory as shown in Figure 7.

Stress (mises)

1 In the **Model Builder** window, under **Results** click **Stress (mises)**.

2 In the **Settings** window for **3D Plot Group**, locate the **Data** section.

3 From the **Data set** list, choose **Layered Material 3**.

Surface 1

1 In the **Model Builder** window, under **Results>Stress (mises)** click **Surface 1**.

2 In the **Settings** window for **Surface**, locate the **Data** section.

3 From the **Data set** list, choose **Layered Material 1**.

Surface 2

1 Right-click **Results>Stress (mises)>Surface 1** and choose **Duplicate**.

2 In the **Settings** window for **Surface**, locate the **Expression** section.

3 In the **Expression** text field, type `shell.mises`.

4 Locate the **Data** section. From the **Data set** list, choose **Layered Material 3**.

5 Click to expand the **Title** section. From the **Title type** list, choose **None**.

6 Click to expand the **Inherit Style** section. From the **Plot** list, choose **Surface 1**.

Deformation 1

1 In the **Model Builder** window, expand the **Surface 2** node, then click **Deformation 1**.

2 In the **Settings** window for **Deformation**, locate the **Expression** section.

3 In the **x component** text field, type `u3`.

4 In the **y component** text field, type `v3`.

5 In the **z component** text field, type `w3`.

Annotation 2

1 In the **Model Builder** window, under **Results>Stress (mises)** right-click **Annotation 1** and choose **Duplicate**.

2 In the **Settings** window for **Annotation**, locate the **Annotation** section.

3 In the **Text** text field, type `ESL Theory`.

4 Locate the **Position** section. In the **y** text field, type `hc`.

5 In the **Stress (mises)** toolbar, click **Plot**.

Use the following instructions to plot the through-thickness stress variation as shown in Figure 8.

Through Thickness 2

1 In the **Model Builder** window, under **Results>Stress, Through-Thickness (Slm11)** right-click **Through Thickness 1** and choose **Duplicate**.

2 In the **Settings** window for **Through Thickness**, locate the **Data** section.

3 From the **Data set** list, choose **Cut Point 3D 2**.

4 Locate the **x-Axis Data** section. In the **Expression** text field, type `shell.Sl11`.

5 Click to expand the **Title** section. From the **Title type** list, choose **None**.

6 Click to expand the **Coloring and Style** section. Find the **Line style** subsection. From the **Line** list, choose **Dashed**.

7 Locate the **Legends** section. In the table, enter the following settings:

Legends
ESL Theory

8 In the **Stress, Through-Thickness (Slm11)** toolbar, click **Plot**.

ADD STUDY

1 In the **Home** toolbar, click **Add Study** to open the **Add Study** window.

2 Go to the **Add Study** window.

3 Find the **Studies** subsection. In the **Select Study** tree, select **General Studies> Eigenfrequency**.

4 Find the **Physics interfaces in study** subsection. In the table, clear the **Solve** check box for **Solid Mechanics (solid)** and **Layered Shell (lshell)**.

5 Click **Add Study** in the window toolbar.

6 In the **Home** toolbar, click **Add Study** to close the **Add Study** window.

STUDY 4

1 In the **Settings** window for **Study**, type `Study 4: Eigenfrequency (ESL Theory)` in the **Label** text field.

2 Locate the **Study Settings** section. Clear the **Generate default plots** check box.

STUDY 4: EIGENFREQUENCY (ESL THEORY)

Step 1: Eigenfrequency

1 In the **Model Builder** window, under **Study 4: Eigenfrequency (ESL Theory)** click **Step 1: Eigenfrequency**.

2 In the **Settings** window for **Eigenfrequency**, locate the **Study Settings** section.

3 Select the **Desired number of eigenfrequencies** check box.

4 In the associated text field, type 12.

5 In the **Home** toolbar, click **Compute**.

RESULTS

Layered Material 4

1 In the **Model Builder** window, under **Results>Data Sets** right-click **Layered Material 2** and choose **Duplicate**.

2 In the **Settings** window for **Layered Material**, locate the **Data** section.

3 From the **Data set** list, choose **Study 4: Eigenfrequency (ESL Theory)/Solution 4 (9) (sol4)**.

4 Right-click **Results>Data Sets>Layered Material 4** and choose **Selection**.

Selection

1 In the **Model Builder** window, under **Results>Data Sets>Layered Material 4** click **Selection**.

2 In the **Settings** window for **Selection**, locate the **Geometric Entity Selection** section.

3 From the **Geometric entity level** list, choose **Boundary**.

4 Select Boundaries 5–8 only.

Use the following instructions to plot mode shapes and eigenfrequencies obtained using the ESL theory.

Mode Shape (Layerwise Theory) 1

1 In the **Model Builder** window, under **Results** right-click **Mode Shape (Layerwise Theory)** and choose **Duplicate**.

2 In the **Settings** window for **3D Plot Group**, type `Mode Shape (ESL Theory)` in the **Label** text field.

3 Locate the **Data** section. From the **Data set** list, choose **None**.

Surface 1

1 In the **Model Builder** window, expand the **Results>Mode Shape (ESL Theory)** node, then click **Surface 1**.

2 In the **Settings** window for **Surface**, locate the **Expression** section.

3 In the **Expression** text field, type `shell.disp`.

Deformation 1

1 In the **Model Builder** window, expand the **Surface 1** node, then click **Deformation 1**.

2 In the **Settings** window for **Deformation**, locate the **Expression** section.

3 In the **x component** text field, type `u3`.

4 In the **y component** text field, type `v3`.

5 In the **z component** text field, type `w3`.

Mode Shape (ESL Theory)

1 In the **Model Builder** window, under **Results** click **Mode Shape (ESL Theory)**.

2 In the **Settings** window for **3D Plot Group**, locate the **Data** section.

3 From the **Data set** list, choose **Layered Material 4**.

4 From the **Eigenfrequency (Hz)** list, choose **1273.8**.

5 Locate the **Plot Settings** section. From the **View** list, choose **New view**.

6 Click the **Zoom Extents** button in the **Graphics** toolbar.

7 In the **Mode Shape (ESL Theory)** toolbar, click **Plot**.